Operating Instructions

Wood chip boiler T4 24-150

Translation of the original German operating instructions for the operator

Read and follow the instructions and safety information!

Technical changes, typographical errors and omissions reserved!

B0830317_en | Edition 03/10/2017

Froling GesmbH | A-4710 Grieskirchen, Industriestraße 12 | www.froeling.com

Table of Contents

1 General

Thank you for choosing a quality product from Froling. The product features a state-of-the-art design and conforms to all currently applicable standards and testing guidelines.

Please read and observe the documentation provided and always keep it close to the system for reference. Observing the requirements and safety information in the documentation makes a significant contribution to safe, appropriate, environmentally friendly and economical operation of the system.

The constant further development of our products means that there may be minor differences from the pictures and content. If you discover any errors, please let us know: doku@froeling.com.

Subject to technical change.

Warranty and Guarantee Conditions

Our sale and delivery conditions will be applicable. These conditions have been made available to customers, and customers have been made aware of them at the time of order completion.

You can also find the guarantee conditions on the enclosed guarantee certificate.

1.1 T4 product overview

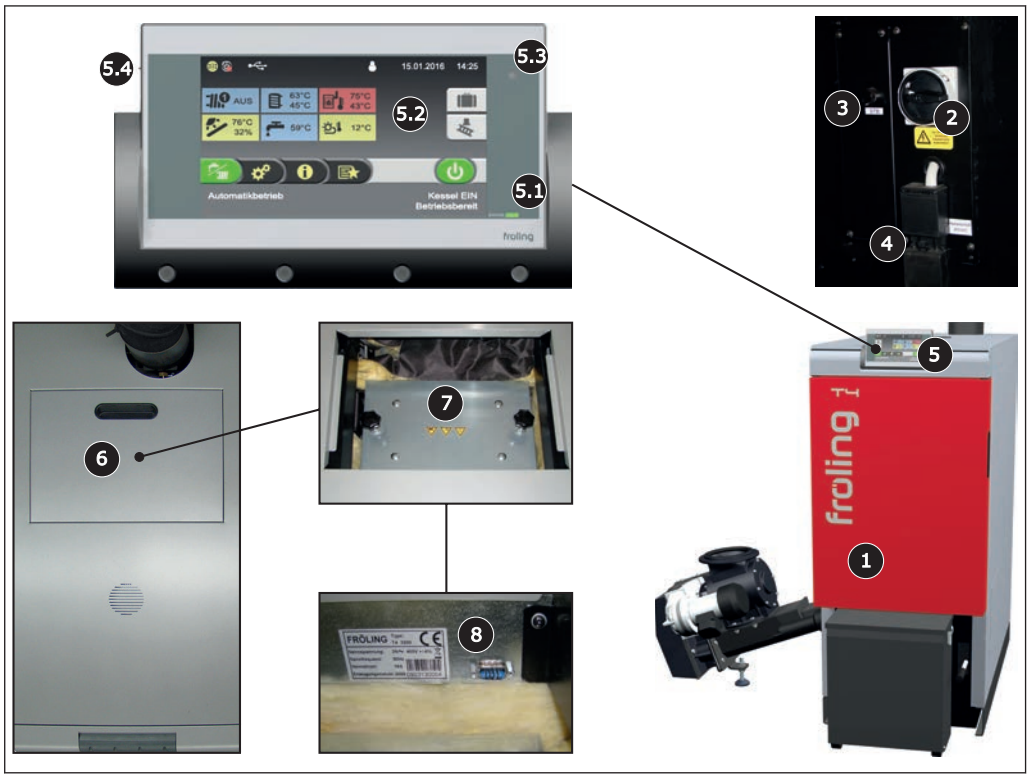

1	Wood chip boiler – Froling T4
2	Main switch: switches the power supply on and off for the entire system
3	High-limit thermostat STL
4	Mains supply
5	Control panel of the Lambdatronic H 3200 T4 Touch controller
5.1	Status LED (operating status): - GREEN constant: BOILER SWITCHED ON - GREEN flashing (interval: 5 sec. OFF, 1 sec. ON): BOILER SWITCHED OFF - ORANGE flashing: WARNING - RED flashing: FAULT
5.2	Large touch screen for displaying and changing operating statuses and parameters
5.3	Brightness sensor to automatically adjust the display brightness
5.4	USB port for connecting a USB stick for software updates
6	Insulating cover
7	Heat exchanger cover
8	Service port

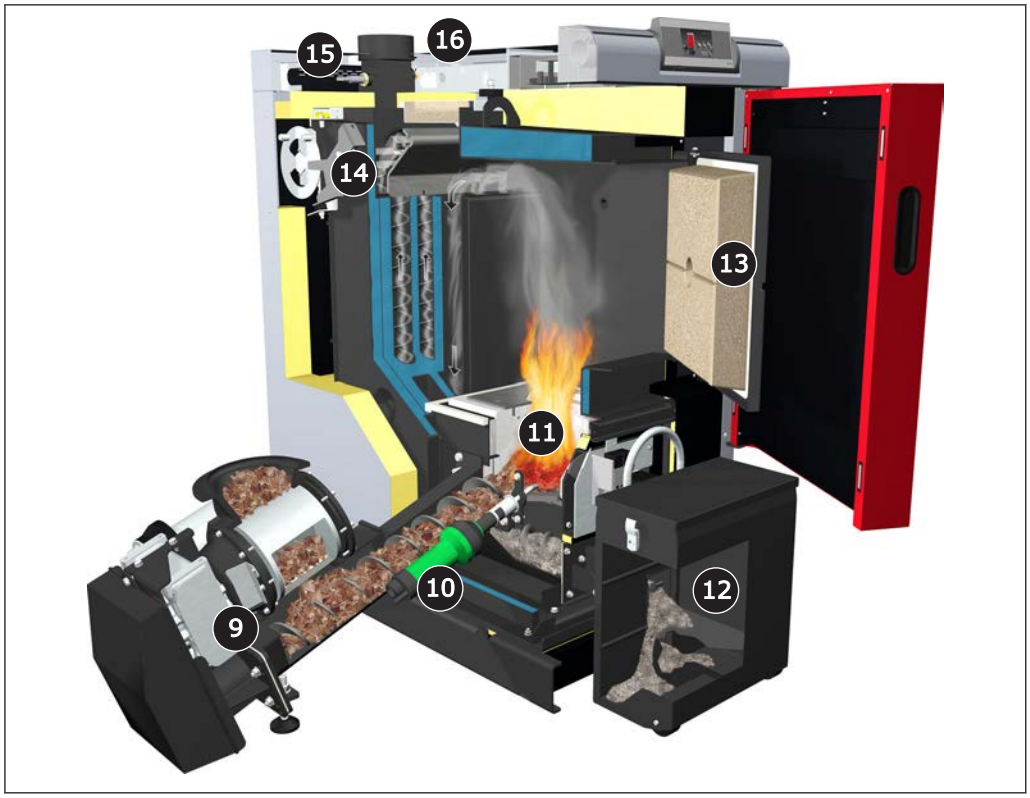

9	Fuel transport unit with rotary valve as a burn back protection system (BBF) and stoker screw for fuel transport
10	Automatic ignition
11	Combustion chamber with fireclay combustion chamber and automatic tipping grate
12	Ash box for combined automatic ash removal from combustion chamber and heat exchanger
13	Combustion chamber door with screw lock and inspection glass
14	WOS system with turbulators and automatic drive for heat exchanger cleaning
15	Broadband probe
16	Flue gas temperature sensor

2 Safety

2.1 Hazard levels of warnings

This documentation uses warnings with the following hazard levels to indicate direct hazards and important safety instructions:

⚠ DANGER

The dangerous situation is imminent and if measures are not observed it will lead to serious injury or death. You must follow the instructions!

⚠ WARNING

The dangerous situation may occur and if measures are not observed it will lead to serious injury or death. Work with extreme care.

⚠ CAUTION

The dangerous situation may occur and if measures are not observed it will lead to minor injuries.

NOTICE

The dangerous situation may occur and if measures are not observed it will lead to damage to property or pollution.

2.2 Pictograms used

The following symbols are used in the documentation and/or on the boiler to show what is required and forbidden and to give warnings.

In accordance with the Machinery Directive, signs fitted directly within the danger area of the boiler indicate immediate hazards or safety procedures. These stickers must not be removed or covered.

	Refer to the operating instructions		Wear safety shoes
	Wear protective gloves		Turn off the main switch
	Keep the doors closed		

	Unauthorised access prohibited

	Warning - hot surface		Warning - hazardous electrical voltage
	Warning - hazardous or irritant materials		Warning - automatic boiler startup
	Warning of injury to fingers or hands, automatic fan		Warning of injury to fingers or hands, automatic screw
	Warning of injury to fingers or hands, gear/chain drive		Warning of injury to fingers or hands, cutting edge

2.3 General safety information

DANGER

If the device is used incorrectly:

Incorrect use of the system can cause severe injury and damage.

When operating the system:

- ❒ Observe the instructions and information in the manuals.
- ❒ Observe the details on procedures for operation, maintenance and cleaning, as well as troubleshooting in the individual manuals.
- ❒ Any work above and beyond this should be carried out by authorised heating engineers or by Froling customer services.

WARNING

External influences:

Negative external influences, such as insufficient combustion air or non-standard fuel, can cause serious faults in combustion (e.g. spontaneous combustion of carbonisation gases or flash fires) which can in turn cause serious accidents!

When operating the boiler, please note the following:

❒ Instructions and information regarding versions and minimum values, as well as standards and guidelines for heating components in the instructions must be observed.

WARNING

Severe injuries and damage can be caused by an inadequate flue gas system.

Problems with the flue gas system, such as poor cleaning of the flue pipe or insufficient chimney draught, can cause serious faults in combustion (such as spontaneous combustion of carbonisation gases or flash fires).

Take the following precautions:

❒ Optimum boiler performance can only be guaranteed if the flue gas system is functioning correctly.

2.4 Permitted uses

The Froling Wood chip boiler T4 is designed solely for heating domestic water. Only the fuels specified in the "Permitted fuels" section must be used.

⇨ See "Permitted fuels" [page 11]

The unit should only be operated when it is in full working order. It must be operated in accordance with the instructions, observing safety precautions, and you should ensure you are aware of the potential hazards. The inspection and cleaning intervals in the operating instructions must be observed. Ensure that any faults which might impair safety are rectified immediately.

The manufacturer or supplier is not liable for any damage resulting from non-permitted uses.

Only original spare parts or specific alternative spare parts authorised by the manufacturer may be used. Any kind of change or modification made to the product will invalidate the manufacturer's conformity with the applicable guideline(s). In such cases, the product will need to undergo new hazard evaluation procedures by the operator. The operator will then be fully responsible for the declaration of conformity according to the valid guideline(s) for the product and will need to issue a corresponding declaration for the device. This person will then assume all of the rights and responsibilities of a manufacturer.

2.4.1 The Clean Air Act 1993 and Smoke Control Areas

Under the Clean Air Act local authorities may declare the whole or part of the district of the authority to be a smoke control area. It is an offence to emit smoke from a chimney of a building, from a furnance or from any fixed boiler if located in a designated smoke control area. It is also an offence to acquire an „unauthorised fuel“ for use within a smoke control area unless it is used in an „exempt“ appliance („exempted“ from the controls which generally apply in the smoke control area). The Secretary of State for Environment, Food and Rural Affairs has powers under the Act to authorise smokeless fuels or exempt appliances for use in smoke control areas in England. In Scotland and Wales this power rests with Ministers in the devolved administrations for those countries. Separate legislation, the Clean Air (Northern Ireland) Order 1981, applies in Northern Ireland. Therefore it is a requirement that fuels burnt or obtained for use in smoke control areas have been „authorised“ in Regulations and that appliances used to burn solid fuel in those areas (other than „authorised“ fuels) have been exempted by an Order made and signed by the Secretary of State or Minister in the devolved administrations.

Further information on the requirements of the Clean Air Act can be found here: http://smokecontrol.defra.gov.uk

Your local authority is responsible for implementing the Clean Air Act 1993 including designation and supervision of smoke control areas and you can contact them for details of Clean Air Act requirements.

The Froling S1 Turbo 15 and S1 Turbo 20 have been recommended as suitable for use in smoke control areas when burning fuels as listed under "Permitted fuels".

The Froling T4-24, T4-30, T4-40, T4-50, T4-60, T4-75, T4-90, T4-100, T4-110, T4-130 and T4-150 have been recommended as suitable for use in smoke control areas when burning fuels as listed under "Permitted fuels".

2.4.2 Permitted fuels

Wood chips

Criterion	Designation as per		Description acc. to ÖNORM M 7133
	ÖNORM M 7133	EN ISO 17225	
Water content	W20	M20	air-dried
	W30	M30	suitable for storage
	W35	M35	limited suitability for storage
Size	G30	P16S	Fine wood chip
	G50	P31S	Medium-sized wood chip

Note on standards

EU:	Fuel acc. to EN ISO 17225 - Part 4: Wood chips class A1 / P16S-P31S
Additional for Germany:	Fuel class 4 (§3 of the First Federal Emissions Protection Ordinance (BimSchV) - applicable version)

Wood pellets

Wood pellets made from natural wood with a diameter of 6 mm

Note on standards

EU:	Fuel acc. to EN ISO 17225 - Part 2: Wood pellets class A1 / D06
and/or:	EN*plus* / DIN*plus* certification scheme

General note:

Before refilling the store, check for pellet dust and clean if necessary.

TIP: Fit the PST pellet deduster for separating the dust particles contained in the return air

Changing the fuel

⚠ CAUTION

Incorrect fuel parameter settings:

Incorrect parameter settings have a significant adverse effect on the functioning of the boiler, and as a result this will invalidate the guarantee.

Therefore:

❒ If the fuel is changed (e.g. from wood chips to pellets), the system must be reset by Froling customer services.

2.4.3 Non-permitted fuels

The use of fuels not defined in the "Permitted fuels" section, and particularly the burning of refuse, is not permitted.

⚠ CAUTION

In case of use of non-permitted fuels:

Burning non-permitted fuels increases the cleaning requirements and leads to a build-up of aggressive sedimentation and condensation, which can damage the boiler and also invalidates the guarantee. Using non-standard fuels can also lead to serious problems with combustion.

For this reason, when operating the boiler:

❒ Only use permitted fuels

2.5 Qualification of operating staff

⚠ CAUTION

If unauthorised persons enter the installation room / boiler room:

Risk of personal injury and damage to property

❒ The operator is responsible for keeping unauthorised persons, in particular children, away from the system.

Only trained operators are permitted to operate the unit. The operator must also have read and understood the instructions in the documentation.

2.6 Protective equipment for operating staff

You must ensure that staff have the protective equipment specified by accident prevention regulations.

- For operation, inspection and cleaning:
  - suitable work wear
  - protective gloves
  - sturdy shoes

2.7 Design information

It is forbidden to carry out modifications to the boiler or to change or deactivate safety equipment.

Always comply with all fire, building, and electrical regulations when installing or operating the boiler system, and follow the operating instructions and mandatory regulations that apply in the country in which the boiler is operated.

2.7.1 Installation and approval of the heating system

The boiler should be operated in a closed heating system. The following standards govern the installation:

Note on standards

EN 12828 - Heating Systems in Buildings

NOTICE! Each heating system must be officially approved.

The appropriate supervisory authority (inspection agency) must always be informed when installing or modifying a heating system, and authorisation must be obtained from the building authorities:

Austria: report to the construction authorities of the community or magistrate

Germany: report new installations to an approved chimney sweep / the building authorities.

2.7.2 General information for installation room (boiler room)

Boiler room characteristics

- The floor must be even, clean and dry and have an adequate load-bearing capacity.
- There must not be a potentially explosive atmosphere in the boiler room as the boiler is not suitable for use in potentially explosive environments.
- The boiler room must be frost-free.
- The boiler does not provide any light, so the customer must ensure sufficient lighting in the boiler room in accordance with national workplace design regulations.
- When using the boiler above 2000 metres above sea level you should consult the manufacturer.
- Danger of fire due to flammable materials.
  The floor of the boiler room must not be flammable. No flammable materials should be stored near the boiler. Flammable objects (e.g. clothing) must not be put on the boiler to dry.
- Damage due to impurities in combustion air.
  Do not use any solvents or cleaning agents containing chlorine and hydrogen halides in the room where the boiler is installed (e.g. chlorination units for swimming pools).
- Keep the air suction opening of the boiler free of dust.

- The system must be protected against the chewing or nesting of animals (e.g. rodents etc.).

Ventilation of the boiler room

Ventilation air for the boiler room should be taken from and expelled directly outside, and the openings and air ducts should be designed to prevent weather conditions (foliage, snowdrifts, etc.) from obstructing the air flow.

Unless otherwise specified in the applicable building regulations for the boiler room, the following standards apply to the design and dimensions of the air ducts:

Note on standards

ÖNORM H 5170 - Construction and fire protection requirements
TRVB H118 - Technical directives on fire protection/prevention

2.7.3 Requirements for central heating water

Unless contrary to other national regulations, the latest versions of the following standards and guidelines apply:

Austria:	ÖNORM H 5195	Switzerland:	SWKI BT 102-01
Germany:	VDI 2035	Italy:	UNI 8065

Observe the standards and also follow the recommendations below:

- ❒ Aim for a pH value of between 8.2 and 10.0. If the central heating water comes into contact with aluminium, the pH value must be between 8.0 and 8.5
- ❒ Use prepared water which complies with the standards cited above for filling and makeup water
- ❒ Avoid leaks and use a closed heating system to maintain water quality during operation
- ❒ When filling with make-up water, always bleed the filling hose before connecting, in order to prevent air from entering the system

Advantages of prepared water:

- Complies with the applicable standards
- Less of a drop in output due to reduced limescale build-up
- Less corrosion due to fewer aggressive substances
- Long-term cost savings thanks to improved energy efficiency

Limit values for filling and make-up water:

	Austria	Germany	Switzerland
Total hardness	≤ 1.0 mmol/L	≤ 2.0 mmol/L	< 0.1 mmol/L
Conductivity	-	< 100µS/cm	< 100 µS/cm
pH value	6.0 – 8.5	6.5 – 8.5	6.0 – 8.5
Chloride	< 30 mg/L	< 30 mg/L	< 30 mg/L

Additional requirements for Switzerland:

The filling and make-up water must be demineralised (fully purified)

- The water must not contain any ingredients that could settle and accumulate in the system
- This makes the water non-electroconductive, which prevents corrosion
- It also removes all the neutral salts such as chloride, sulphate and nitrate which can weaken corrosive materials in certain conditions

If some of the system water is lost, e.g. during repairs, the make-up water must also be demineralised. It is not enough to soften the water. The heating system must be professionally cleaned and rinsed before filling the units.

Inspection:

- After eight weeks, the pH value of the water must be between 8.2 and 10.0. If the central heating water comes into contact with aluminium, the pH value must be between 8.0 and 8.5
- Yearly. Values must be recorded by the owner

2.7.4 Notes for using pressure maintenance systems

Pressure maintenance systems in hot-water heating systems keep the required pressure within predefined limits and balance out volume variations caused by changes in the hot-water temperature. Two main systems are used:

Compressor-controlled pressure maintenance

In compressor-controlled pressure maintenance units, a variable air cushion in the expansion tank is responsible for volume compensation and pressure maintenance. If the pressure is too low, the compressor pumps air into the tank. If the pressure is too high, air is released by means of a solenoid valve. The systems are built solely with closed-diaphragm expansion tanks to prevent the damaging introduction of oxygen into the heating water.

Pump-controlled pressure maintenance

A pump-controlled pressure maintenance unit essentially consists of a pressure-maintenance pump, relief valve and an unpressurised receiving tank. The valve releases hot water into the receiving tank if the pressure is too high. If the pressure drops below a preset value, the pump draws water from the receiving tank and feeds it back into the heating system. Pump-controlled pressure maintenance systems with **open expansion tanks** (e.g. without a diaphragm) introduce ambient oxygen via the surface of the water, exposing the connected system components to the risk of corrosion. These systems offer no oxygen removal for the purposes of corrosion control as required by VDI 2035 and **in the interests of corrosion protection should not be used**.

2.7.5 Return temperature control

If the hot water return is below the minimum return temperature, some of the hot water outfeed will be mixed in.

⚠ CAUTION

Risk of dropping below dew point/condensation formation if operated without return temperature control.

Condensation water forms an aggressive condensate when combined with combustion residue, leading to damage to the boiler.

Take the following precautions:

❒ We recommend using a return temperature control.

➥ The minimum return temperature is 45 °C. We recommend fitting some sort of control device (e.g. thermometer).

2.7.6 Use with storage tank

NOTICE

In principle it is not necessary to use a storage tank for the system to run smoothly. However, we recommend that you use the system with a storage tank, as this ensures a continuous supply of fuel in the ideal output range of the boiler.

For the correct dimensions of the storage tank and the line insulation (in accordance with ÖNORM M 7510 or guideline UZ37) please consult your installer or Froling.

⇨ See "Addresses" [page 43]

2.7.7 Chimney connection/chimney system

EN 303-5 specifies that the entire flue gas system must be designed to prevent, wherever possible, damage caused by seepage, insufficient feed pressure and condensation. Please note in this respect that flue gas temperatures lower than 160K above room temperature can occur in the permitted operating range of the boiler.

NOTICE! Please see the technical data contained in the assembly instructions for further information about standards and regulations as well as the flue gas temperatures when clean and the other flue gas values!

2.8 Safety devices

1	**BOILER OFF** *(switches off the boiler to prevent overheating)* ❒ Tap “Boiler off” ➥ Automatic mode is switched off ➥ Control system follows the boiler shut-down procedure ➥ Pumps continue to run
2	**MAIN SWITCH** *(switches off the power supply)* Before carrying out work on/in the boiler: ❒ Tap “Boiler off” ➥ Automatic mode is switched off ➥ Control system follows the boiler shut-down procedure ❒ Switch off the main switch and let the boiler cool down
3	**SAFETY TEMPERATURE LIMITER (STL)** *(protection against overheating)* The STL switches off the combustion system when the boiler reaches 105°C. The pumps continue to run. Once the temperature falls below approx. 75°C, the STL can be reset mechanically.
SV	**SAFETY VALVE** *(protection against overheating/excess pressure)* When the boiler pressure reaches a maximum of 3 bar, the safety valve opens and the heated water is blown off in the form of steam.

2.9 Residual risks


WARNING

When touching hot surfaces:

Severe burns are possible on hot surfaces and the flue gas pipe!

When work is carried out on the boiler:

- ❒ Shut down the boiler in a controlled way (operating status "Boiler off") and allow it to cool down
- ❒ Protective gloves must generally be worn for work on the boiler, and it should only be operated using the handles provided
- ❒ Insulate the flue pipes or simply avoid touching them during operation.


WARNING

When inspecting and cleaning the boiler with the main switch on:

Serious injuries possible due to automatic boiler startup!

Before inspection and cleaning work in/on the boiler:

- ❒ Switch the boiler off by tapping “Boiler off”
  The boiler follows the shutdown procedure and switches to "Boiler off“ mode
- ❒ Allow boiler to cool for at least 1 hour
- ❒ Switch off the main switch and take precautions to prevent accidental switching on.

WARNING

If non-permitted fuel types are used:

Non-standard fuels can cause serious faults in combustion (e.g. spontaneous combustion of carbonisation gases / flash fires) which can lead to serious accidents!

Take the following precautions:

- ❒ Only use fuels specified in the "Permitted fuels" section of these operating instructions.

2.10 Emergency procedure

2.10.1 Overheating of the system

If the system overheats and the safety devices fail, proceed as follows:

NOTICE! Do not under any circumstances switch off the main switch or disconnect the power supply.

- ❒ Keep all the doors on the boiler closed
- ❒ Switch boiler off by tapping “Boiler OFF”
- ❒ Open all mixing valve taps, switch on all pumps.
  - ➥ The Froling heating circuit control performs this function in automatic operation.
- ❒ If a third-party controller is used, carry out the appropriate measures to activate the mixer taps and pumps manually.
- ❒ Leave the boiler room and close the door
- ❒ Open any available radiator thermostat valves

If the temperature does not drop:

- ❒ Contact the installer or Froling customer services
  ⇨ See "Addresses" [page 43]

2.10.2 Smell of flue gas

DANGER

If you smell flue gas in the boiler room:

Inhaling toxic flue gas can be fatal!

If you smell flue gas in the room where the boiler is installed:

- ❒ Keep all the doors on the boiler closed
- ❒ Shut down the boiler according to procedure
- ❒ Ventilate the room where the boiler is installed
- ❒ Close the fire door and doors to living areas

Recommendation: Do not install smoke alarms and carbon monoxide detectors near the system.

2.10.3 Fire in the system

DANGER

In case of fire in the system:

Risk of death by fire and poisonous gases

Emergency procedure in case of fire:

- ❒ Leave the boiler room
- ❒ Close the doors
- ❒ Inform the fire department

3 Operating the System

3.1 Assembly and initial startup

Assembly, installation and initial startup of the boiler must only be carried out by qualified staff, and these procedures are described in the accompanying assembly instructions.

NOTICE! See assembly instructions for theT4

NOTICE

Optimum efficiency and efficient, low-emission operation can only be guaranteed if the system is set up by trained professionals and the standard factory settings are observed.

Take the following precautions:

❒ Initial startup should be carried out with an authorised installer or with Froling customer services

The individual steps for initial start-up are explained in the operating instructions for the controller

NOTICE! See operating instructions for boiler controller!

The customer is responsible for ensuring the following prior to initial start-up of the system by Froling customer services:

- Electrical installation
- Installation of water pipes
- Connect flue gas including all insulation work
- Work must comply with local fire protection regulations
- Correct assembly / setting of the air duct according to firewood used, see boiler assembly instructions

- The necessary "dry run" of the system means that the discharge system must be empty at the start of initial startup. Fuel must be available, however, so that the discharge system can be filled once the system is released.
- It is essential that the electrician who has carried out the installation work is available when starting up the system for the first time to make any changes to the wiring which may become necessary.
- During initial start-up, operating staff are shown how to use the boiler. It is imperative for proper handover of the product that those involved are present as this is a one-off opportunity.

3.2 Filling/refilling the store with fuel

When filling the store you should always ensure that you are using the right fuel:

⇨ See "Permitted fuels" [page 11]

3.2.1 Loading of fuel for a partially emptied store with rotary agitator

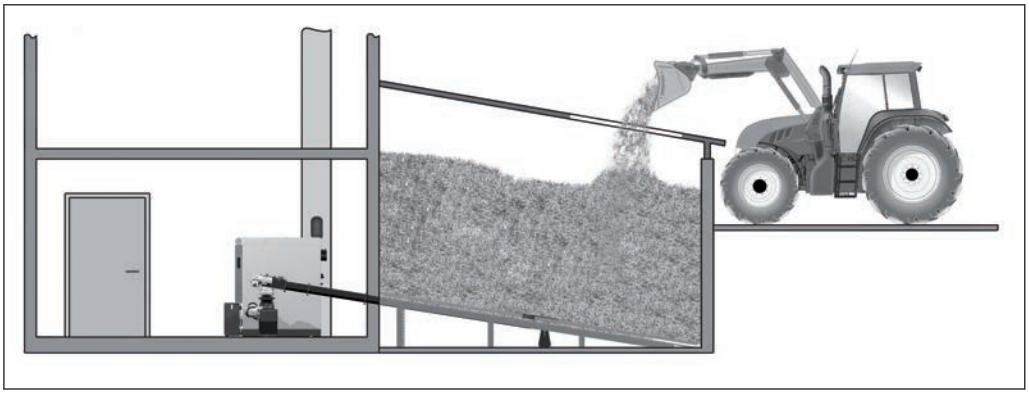

If there is still sufficient fuel in the store (the head of the rotary agitator is completely covered with fuel and the rotary agitator arms are not extended), the store can be filled:

❒ Load the fuel at the filling opening

3.2.2 Loading wood chips in an empty store (not under pressure)

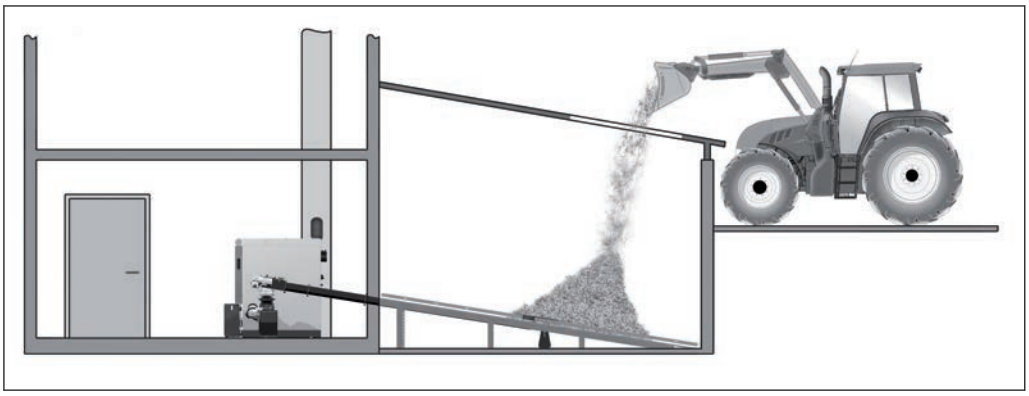

NOTICE! If the head of the rotary agitator is already free of material and the arms / spring blades are extended, the feeder unit must be active during the filling process.

❒ Activate “Extra heating” mode in the quick selection menu

Exception in the case of a separate drive:

❒ Tap “On” in “Bunker filling rotary agitator” during manual operation
  ➥ The rotary agitator head runs for approx. 3 minutes

❒ Load a small quantity of wood chips and wait until the arms / spring blades are touching the head of the rotary agitator (approx. 2 revolutions)

❒ Only then should you load the remaining material

3.2.3 Blowing in pellets for a store with pellet screw

- ❒ Switch off the boiler by tapping “Boiler off” at the mode icon and allow to cool for at least two hours
- ❒ Close all openings to the store to seal out dust
- ❒ Blow the fuel into the store

3.2.4 Blowing in fuel for a partially emptied store with rotary agitator

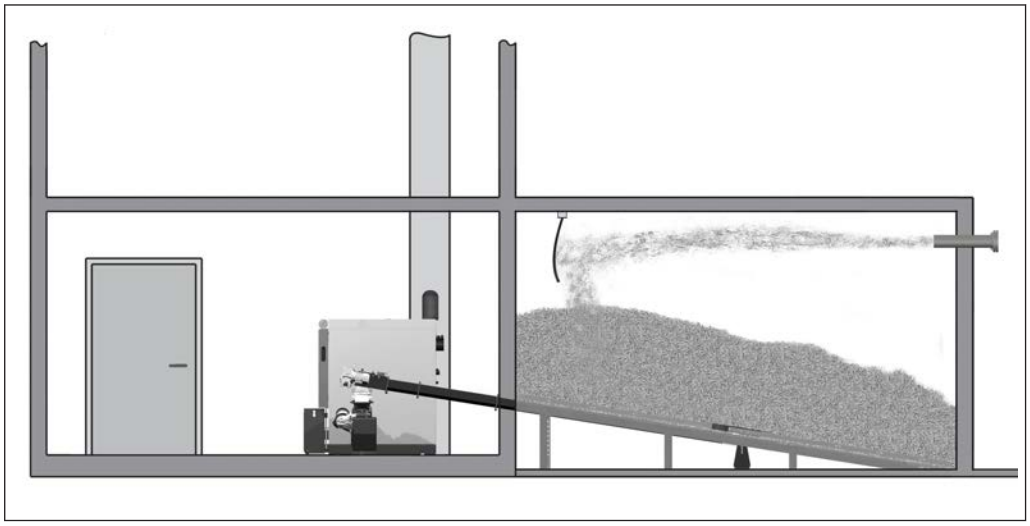

If there is still sufficient fuel in the store (the head of the rotary agitator is completely covered with fuel and the rotary agitator arms are not extended), the store can be filled as follows:

- ❒ Switch off the boiler by tapping “Boiler off” at the mode icon and allow to cool for at least two hours
- ❒ Close all openings to the store to seal out dust
- ❒ Blow the fuel into the store

3.2.5 Blowing in fuel for an empty store with rotary agitator

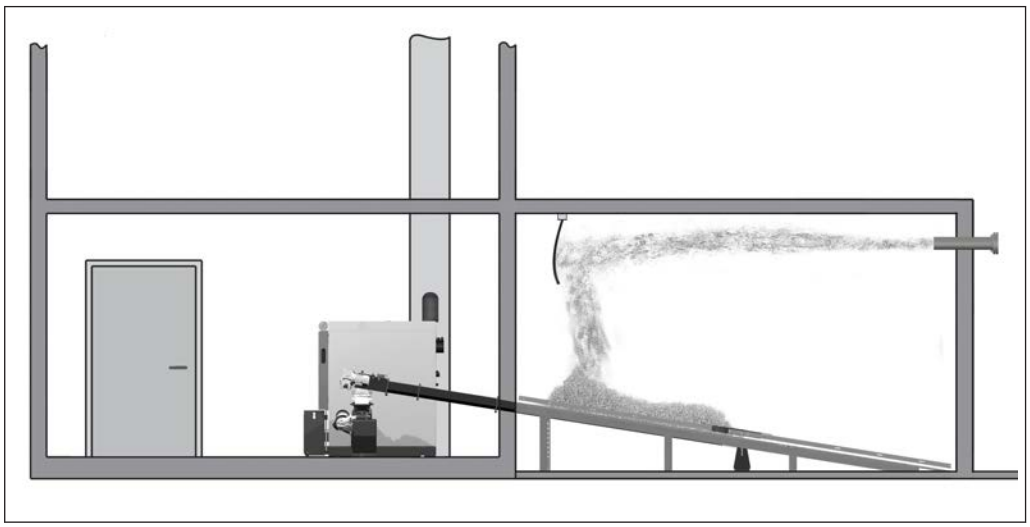

NOTICE! If the head of the rotary agitator is already free of material and the arms / spring blades are extended, the store must not be filled until the following actions have been taken:

- ❒ Switch off the boiler by tapping “Boiler off” at the mode icon and switch off main switch
- ❒ Turn off the main switch on the expansion switch cabinet (if installed)

- ❒ Distribute any fuel remaining in the store (in corners, against walls) over the head of the rotary agitator with your hands
  - ➥ Follow the instructions on working in the fuel store!

NOTICE! Refer to the notice (supplied with the boiler) at the entrance to the store

After working in the store:

- ❒ Turn on the main switch on the boiler and on the expansion switch cabinet (if installed)
- ❒ Activate “Extra heating” mode in the quick selection menu

Exception in the case of a separate drive:

- ❒ Tap “On” in “Bunker filling rotary agitator” during manual operation
  - ➥ The rotary agitator head runs for approx. 3 minutes

- ❒ Wait until the arms / spring blades are touching the head of the rotary agitator (approx. 2 revolutions)
- ❒ Switch off the boiler by tapping “Boiler off” at the mode icon and allow to cool for at least two hours
- ❒ Close all openings to the store to seal out dust
- ❒ Blow the fuel into the store

If the fuel store is completely empty and there is no residual fuel to redistribute:

- ❒ Contact Froling and seek advice before filling the fuel store

⇨ See "Address of manufacturer" [page 43]

3.3 Heating up the boiler

NOTICE

Do not modify the factory settings!

Changing the system's factory settings can be detrimental to efficiency and emissions of the system.

3.3.1 Switching on the power supply

❒ Turn on the main switch
- ➥ There is voltage at all of the boiler's components
- ➥ When the control has completed the system start, the boiler is ready for operation

3.3.2 Switching on the boiler

❒ For other modes press the relevant function key
- ➥ Information on function keys in the relevant operating instructions of the boiler controller

3.3.3 Regulating the boiler

Please see the relevant operating instructions for the boiler controller for the necessary control steps, as well as displaying and modifying parameters

3.3.4 Switching off the boiler

❒ Switch off the boiler by tapping “Boiler off”
- ➥ The boiler follows the shutdown program and switches to "Boiler off" status
- ➥ The combustion unit is switched off, the chamber discharge unit and the entire hydraulic system remain active

3.3.5 Switching off the power supply

⚠ WARNING

When turning off the main switch in automatic mode:

Serious combustion faults leading to serious accidents are possible.

Before turning off the main switch:

❒ Switch boiler off by tapping “Boiler OFF”
- ➥ The boiler follows the shutdown procedure and switches to "Boiler off“ status after the cleaning cycle

❒ Turn off the main switch
- ➥ Boiler controller is switched off
- ➥ The components powered via the control cabinet are powered down
- ➥ CAUTION: the expansion switch cabinet, which has its own power supply, is still live.

NOTICE! Frost protection function is no longer active!

4 Boiler Servicing

4.1 General information on servicing

DANGER

When working on electrical components:

Risk of electrocution!

When work is carried out on electrical components:

- ❒ Only have work carried out by a qualified electrician
- ❒ Observe the applicable standards and regulations
  - ➥ Work must not be carried out on electrical components by unauthorised people

WARNING

When inspecting and cleaning the boiler with the main switch on:

Serious injuries possible due to automatic boiler startup!

Before inspection and cleaning work in/on the boiler:

- ❒ Switch the boiler off by tapping “Boiler off”
  The boiler follows the shutdown procedure and switches to "Boiler off“ mode
- ❒ Allow boiler to cool for at least 1 hour
- ❒ Switch off the main switch and take precautions to prevent accidental switching on.

WARNING

During inspection and cleaning work to the hot boiler:

Hot parts and the flue gas pipe can cause serious burns!

Take the following precautions:

- ❒ It should be standard practice to wear protective gloves when working on the boiler.
- ❒ Only operate the boiler using the handles provided
- ❒ Before starting any maintenance work activate “Service mode” in the quick menu
  - ➥ The boiler follows the shutdown procedure and switches to "Boiler off" status
- ❒ Allow boiler to cool for at least 1 hour
- ❒ After maintenance has been carried out switch the boiler on in the desired mode.
  - ➥ In service mode the boiler does not start automatically.

WARNING

Incorrect inspection and cleaning:

Incorrect or insufficient inspection and cleaning of the boiler can cause serious faults in combustion (e.g. spontaneous combustion of carbonisation gases / flash fires) and this can lead to serious accidents and damage!

Take the following precautions:

❒ Clean the boiler following the instructions in the instruction manual. Follow the boiler operating instructions.

NOTICE

We recommend that you keep a maintenance book in accordance with ÖNORM M7510 of the Technical Directive for Fire Prevention (TRVB)

4.2 Inspection and cleaning

- ❒ Regular cleaning of the boiler extends its life and is a basic requirement for smooth running.
- ❒ Recommendation: use an ash vacuum for cleaning.

4.2.1 Inspection

Checking the system pressure

- ❒ Check the system pressure on the pressure gauge
  - ➥ The value must be 20% above the pre-stressed pressure of the expansion tank
    NOTICE! Check that the position of the pressure gauge and rated pressure of the expansion tank match your installer's specifications!

If the system pressure decreases:

- ❒ Top up with water
  NOTICE! If this happens frequently, the seal of the heating system is faulty! Inform your installer

If large pressure fluctuations are observed:

- ❒ Ask an expert to inspect the expansion tank

Checking the safety valve

- ❒ Check the seal of the safety valve regularly and ensure that the valve is not dirty
  NOTICE! Inspection work must be carried out in accordance with the manufacturer's instructions.

Checking the geared motors

- ❒ Carry out a visual inspection of the seal on all the geared motors in the system
  - ➥ There should be no significant leakage of lubricant.
    NOTICE! The presence of a few drops of lubricant may be normal. If there is significant loss of lubricant, inform your installer or Froling customer services.

4.2.2 Cleaning

Emptying the ash container

The ash container must be emptied at appropriate intervals depending on energy requirements and fuel quality.

If the ash container is full before you check the ash level, the warning "`ash box full, please empty`" will appear on the display.

⚠ WARNING

When removing the ash container cover during operation:

False air infiltration via the ash screw duct can lead to uncontrolled combustion and the risk of accidents.

Before checking the ash level / emptying the ash container:

❒ Switch off the boiler by tapping "Boiler off"

↳ The boiler follows the shutdown procedure and switches to "Boiler off" status.

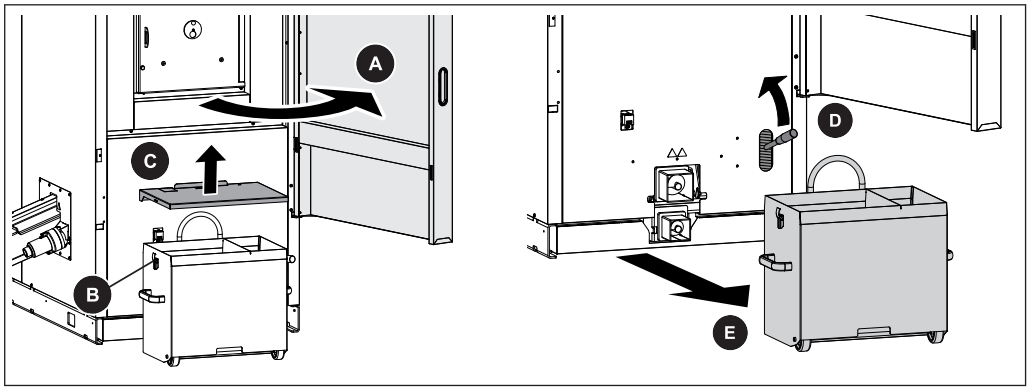

In "Boiler off" status:

❒ Open the insulated door (A)

❒ Open the side clamps (B) and remove the ash container cover (C)

↳ Note the sticker on the cover of the ash container!

❒ Check the ash level in both chambers

↳ If either of the two chambers is more than two thirds full, empty the ash container

❒ Open the ash container clamp using the locking lever (D)

❒ Remove the ash container from the boiler (E)

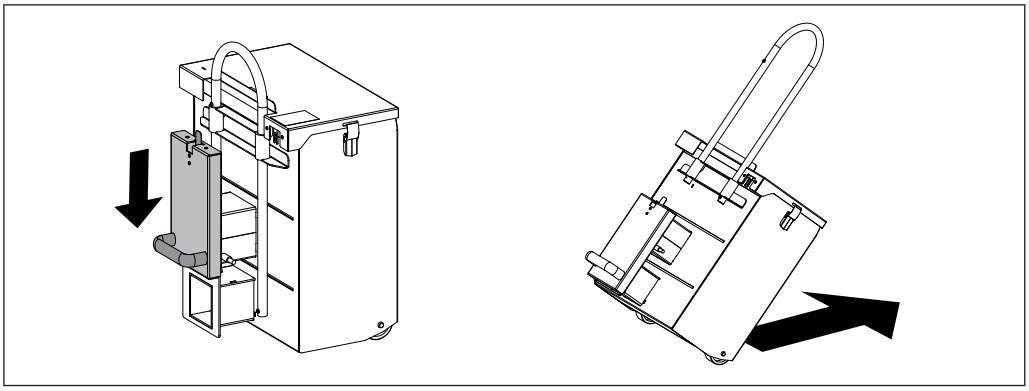

❒ Place the transport cover over the openings of the ash container

❒ Put on the ash container cover, pull out the transport lever and take the ash container to the emptying point

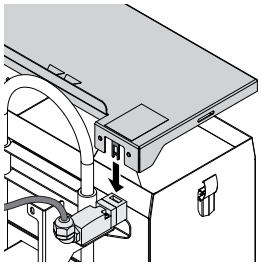

After emptying the ash container:

❒ Replace the ash container in the boiler and clamp with the locking lever

❒ Replace the cover and secure with the clamps

↪ Make sure that the pin is inserted in the limit switch correctly.

4.2.3 Recurrent check and cleaning

The boiler must be cleaned and inspected at appropriate intervals depending on the service hours and fuel quality.

For fuels with a low ash content (standard wood chips), annual cleaning and inspection (2000 to 2500 service hours) is usually sufficient. For less efficient fuels and fuels with a high ash content (indicated by short emptying intervals for the ash container), the work should be carried out more frequently accordingly.

⚠ WARNING

Inspection and cleaning work with the boiler switched on

Serious injuries from automatic startup of the boiler and severe burns from hot parts and the flue gas pipe are possible.

Therefore:

- ❒ Only carry out work on the boiler when the main switch is turned off
- ❒ Always wear protective gloves when working on the boiler
- ❒ Only operate the boiler using the handles provided
- ❒ Follow the procedure below when starting and finishing inspection and cleaning work

Before starting inspection and cleaning work

- ❒ Switch off the boiler by tapping “Boiler off”
  - ➥ Boiler shuts down and switches to "Boiler off” status
- ❒ Allow the boiler to cool for at least 1 hour
- ❒ On the control, go to the “Manual operation” menu
  NOTICE! See operating instructions for boiler controller
- ❒ Use the DOWN arrow to navigate to the “`Tip drive`” parameter
- ❒ Set parameter to “`ON`”
  - ➥ Combustion grate tips
- ❒ Turn off the main switch

After inspection and cleaning work

- ❒ Turn on the main switch
  - ➥ Combustion grate previously opened manually now closes automatically and the boiler switches to “Boiler off” status
- ❒ Activate “service mode” in the quick menu
  - ➥ The boiler starts the cleaning module and removes any remaining ash in the combustion chamber
  - ➥ Once self-cleaning is finished the boiler switches to "Boiler off" status.

Clean the combustion chamber

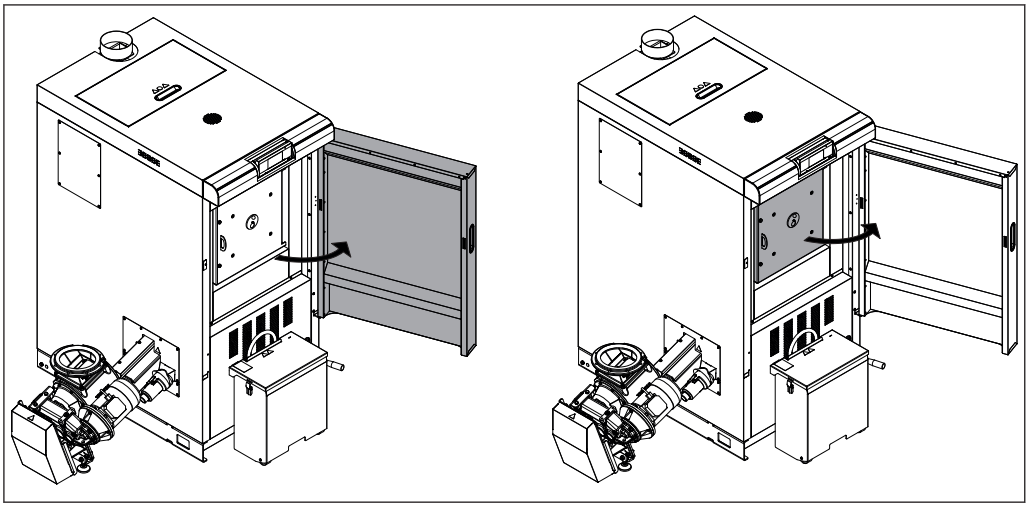

❒ Open the insulated door and loosen the screw connections on the combustion chamber door

❒ Open the combustion chamber door

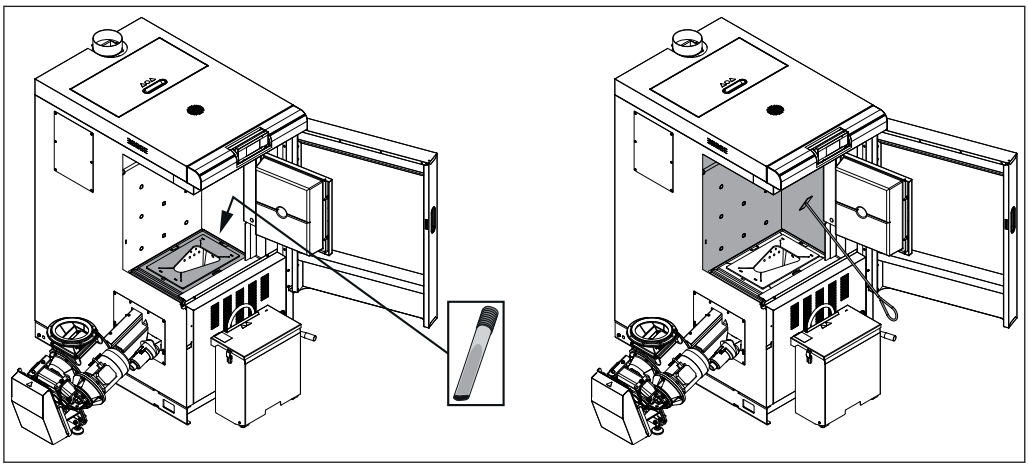

❒ Use a small shovel or the like (ash vacuum recommended) to remove any ash from the combustion chamber

↳ Do not throw the ash onto the grate

❒ Remove the ash deposits from the walls of the entire combustion chamber (top, side, back) using an ash scraper or broom (working with an ash vacuum is best)

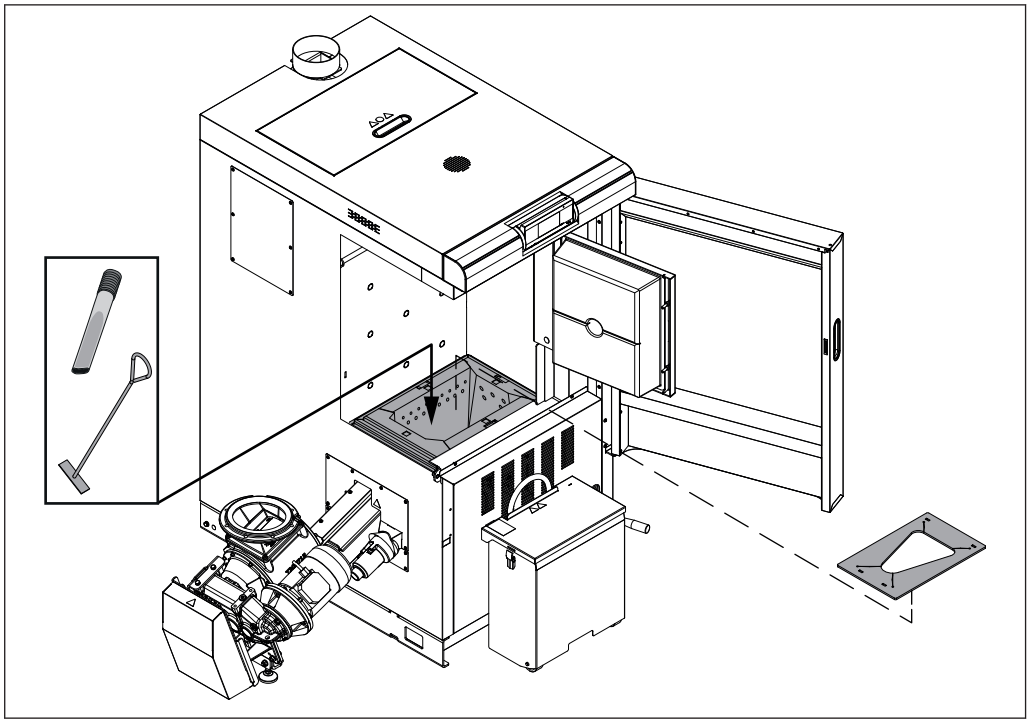

❒ Remove the burn-out opening

❒ Check the firebricks and combustion grate for dirt and deposits and clean if necessary (ash vacuum recommended)

❒ Install the burn-out opening

↳ The opening must be facing the fuel infeed side!

Cleaning the heat-exchanger and flue gas collection chamber

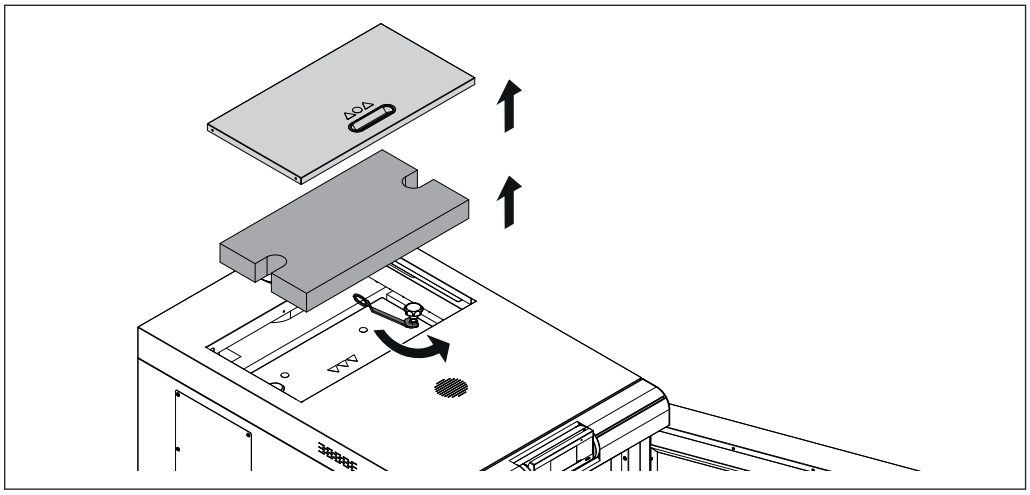

❒ Removing the insulating cover and the insulating mat

❒ Loosen the lock nut on the star-shaped screw knob

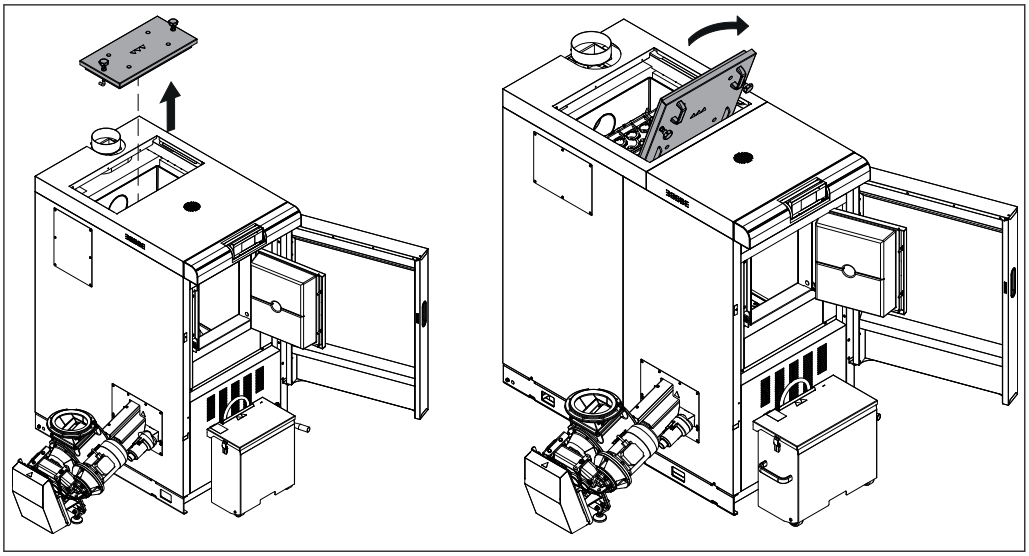

T4 24-50: ❒ Unlock the cover by turning the star-shaped screw knob and remove

T4 60-150: ❒ Unlock the cover by turning the star-shaped screw knob and open

➥ In the case of low down boiler rooms, you can remove the heat exchanger cover:

❒ Undo the screw connections on the hinge of the cover and remove the cover

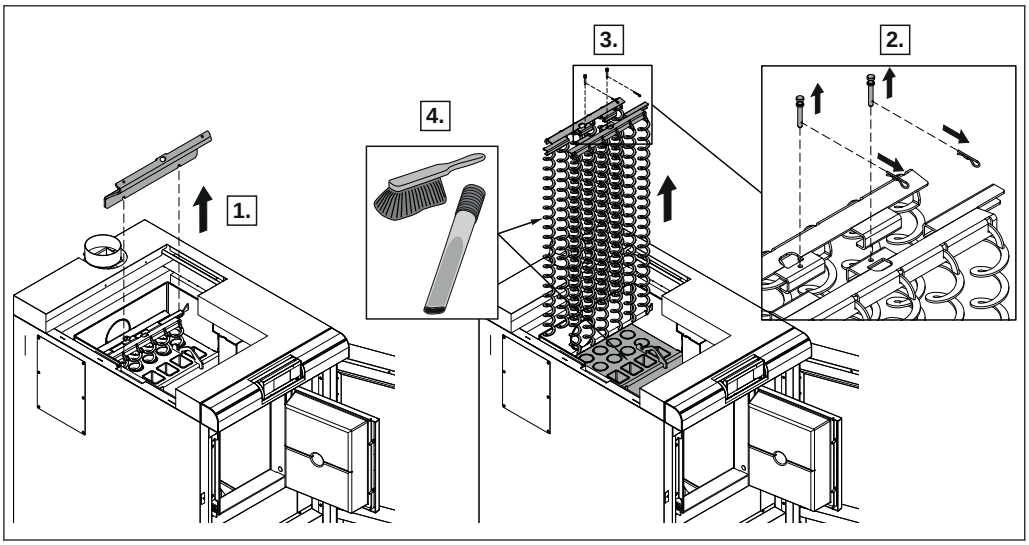

❒ Pull out the guide plate(s)

❒ Clean the entire area with an ash vacuum

❒ Remove spring cotter from the eyebolt

❒ Remove eyebolt from the mounting sheet and WOS shaft

❒ Remove mounting sheet including turbulators from the boiler

Clean the heat exchanger pipes

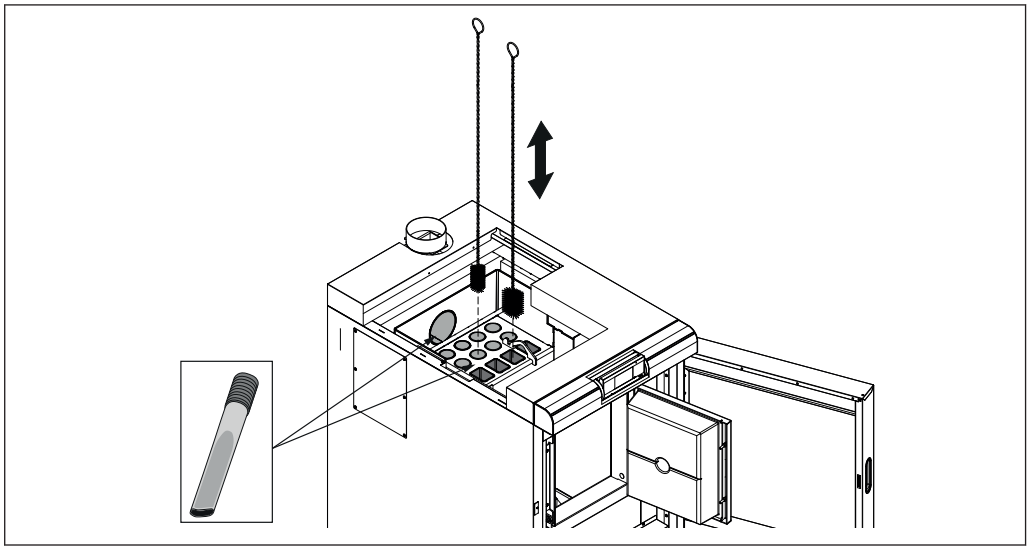

❒ Clean the rectangular heat exchanger pipes using the cleaning brush provided

❒ Brush several times with the round cleaning brush to properly clean the heat exchanger pipes

❒ Use the ash vacuum to remove any residual ash from the flue gas collection chamber

❒ After cleaning, reassemble the dismantled components in the reverse order

➥ Take care to insert the guide plate properly (do not leave a large gap between the boiler and the sheet metal).

➥ Ensure that all of the maintenance openings are properly closed.

Cleaning the flue gas temperature sensor

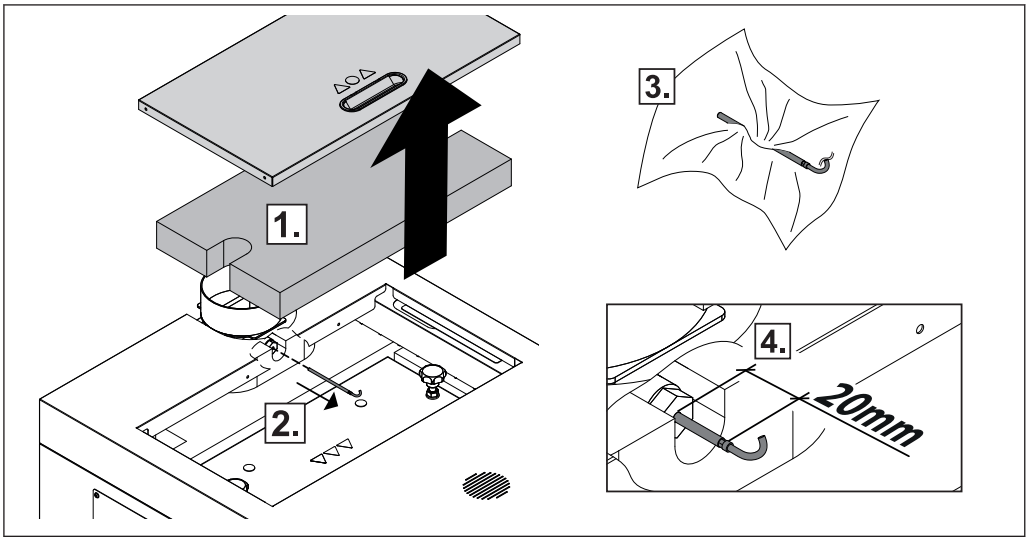

1. Remove the insulating cover and thermal insulation
2. Release the retaining screw and remove the flue gas temperature sensor from the flue gas pipe
3. Wipe the flue gas temperature sensor with a clean cloth
4. Push in the flue gas temperature sensor until about 20 mm of the sensor remains protruding from the bushing and secure with fixing screw

Cleaning the flue gas pipe

- ❒ Unplug the connection cable of the induced draught fan
  - ➥ This prevents damage to the fan from the cleaning brush
- ❒ Remove the inspection cover on the connecting pipe
- ❒ Clean the connecting pipe between the boiler and chimney with a chimney sweeping brush
  - ➥ Depending on the layout of the flue gas pipes and the chimney draught, cleaning once a year may not be enough!
- ❒ Plug in the connection cable of the induced draught fan

Check the seal on the doors

Check the door stop side

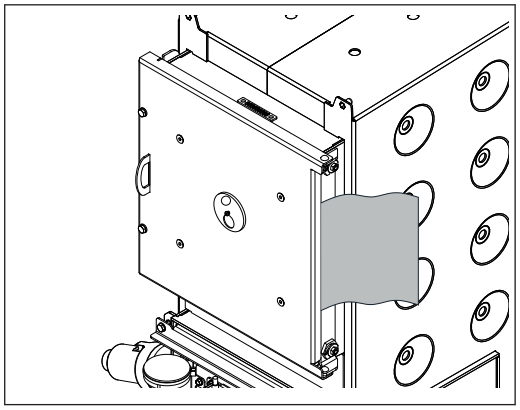

- ❒ Open the door
- ❒ Insert a sheet of paper at both the top and the bottom of the door stop between the door and the boiler
- ❒ Close the door
- ❒ Try to pull out the sheets of paper
  - ➥ If the paper cannot be removed:
    the door is sealed.
  - ➥ If the paper can be removed:
    the door is not sealed properly - push the hinge toward the back
    => see boiler assembly instructions

Check the door handle side

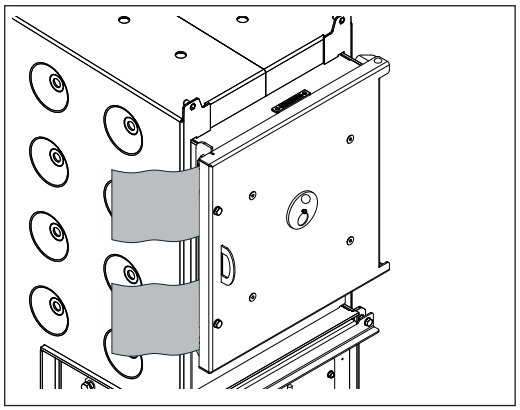

- ❒ Open the door
- ❒ Insert a sheet of paper at both the top and the bottom area at the side of the door handle between the door and the boiler
- ❒ Close the door
- ❒ Try to pull out the sheets of paper
  - ➥ If the paper cannot be removed:
    the door is sealed.
  - ➥ If the paper can be removed:
    The door is not sealed properly - push the locking plate toward the back
    => see boiler assembly instructions

Checking the draught controller flap

❒ Check that the draught controller flap moves freely

Cleaning the measurement line of the underpressure controller

❒ Open the insulated door and remove the ash box
⇨ See "Emptying the ash container" [page 29]

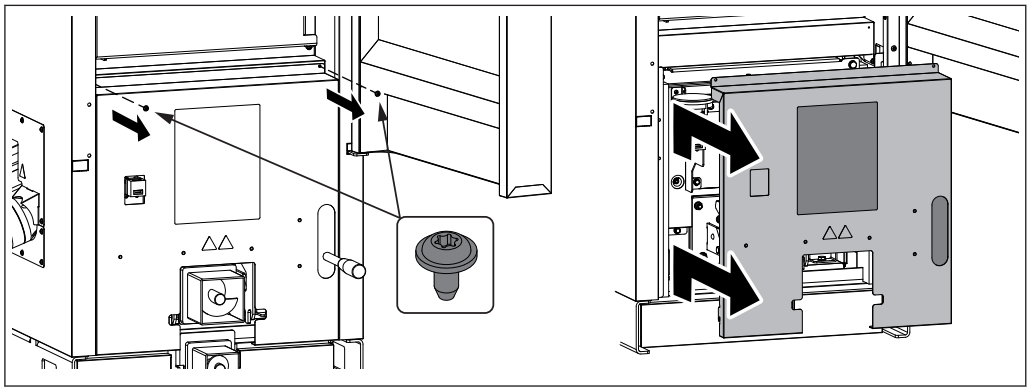

❒ Remove the left and right screws on the front cover plate
❒ Slide the cover plate up and remove

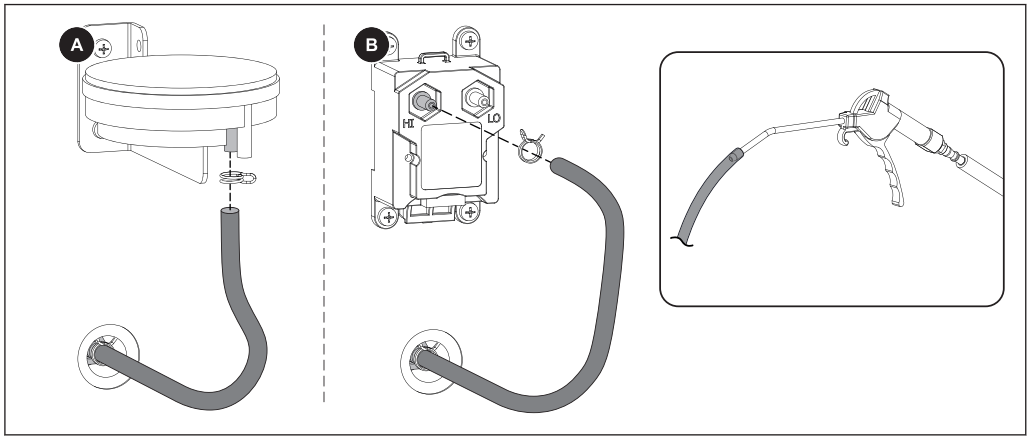

❒ Loosen the twin wire clamp with pliers and remove the measurement line from the under-pressure sensor cartridge
❒ Clean the measurement line with gentle compressed air
↪ WARNING! Do not direct compressed air into under-pressure sensor cartridge! This could damage it!
❒ After cleaning, refit the measurement line
Depending on the design, port “-” (A) or “HI” (B)

See also

🗎 Emptying the ash container [→ 29]

4.3 Emissions measurement by chimney sweep or regulatory body

Various legal regulations stipulate that heating systems must be inspected periodically. In Germany this is regulated by the First Federal Emissions Protection Ordinance (BimSchV) in the last amended version, and in Austria by various state laws.

The following minimum requirements must be met by the operator of the system for a successful measurement:

- ❒ Thoroughly clean the boiler immediately before the measurement
- ❒ Only use fuels of high quality which meet the requirements as stipulated in the boiler operating instructions (“Permitted fuels” chapter)
- ❒ Ensure that there is adequate heat consumption on the day of the measurement. (e.g. storage tank must be able to take heat for the duration of the measurement)

4.3.1 Preparing for the measurement

- ❒ There must be a suitable measuring port in the straight flue gas pipe for the measurement. The measuring port must be twice the flue gas pipe diameter away from the last upstream bend.
  - ➥ If the measuring port is not correctly positioned, the measuring result will be distorted
- ❒ Ensure that there is enough combustion air
- ❒ Prepare adequate fuel
- ❒ Ensure that there is adequate heat dissipation
- ❒ Clean the boiler thoroughly for the emissions measurement

4.3.2 Emissions measurement by chimney sweep or regulatory body

Immediately before the start of the measurement:

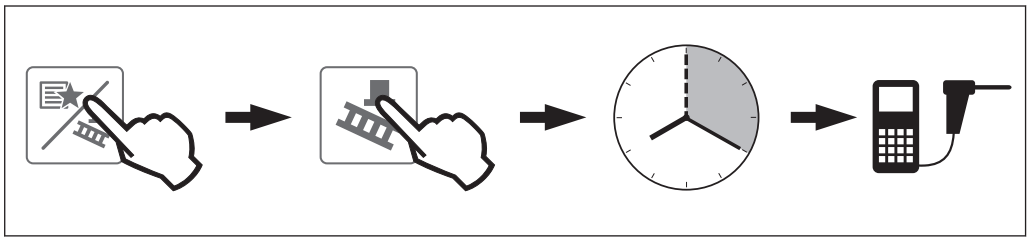

- ❒ Activate “Chimney-sweep mode” in the quick menu
  - ➥ The flue gas temperature and residual oxygen content should have stabilised approximately 20 minutes after activation
  - ➥ The display will indicate that the boiler is ready for measurement

4.4 Maintenance agreement / Customer service

NOTICE! We recommend a yearly inspection by Froling customer services or an authorised partner (third party maintenance).

Regular maintenance and servicing by a heating specialist will ensure a long, trouble-free service life for your heating system. It will ensure that your system stays environmentally-friendly and operates efficiently and cost-effectively.

In the course of this maintenance the entire system is inspected and optimised, particularly regulation and control of the boiler. The emission measurement carried out can also be used to draw conclusions about the combustion performance of the boiler. For this reason, FROLING offers a service agreement, which optimises operating safety. Please see the details in the accompanying guarantee certificate.

Your Froling customer service office will also be happy to advise you.

NOTICE

All national and regional regulations relating to regular testing of the system must be observed. Please be advised that, in Austria, commercial systems with a rated heat output of 50 kW or more must be regularly tested at yearly intervals in accordance with the Heating Plant Regulations (Feuerungsanlagen-Verordnung).

4.5 Replacement parts

With Froling original replacement parts in your boiler, you are using parts that match perfectly. As the parts fit together so well, installation times are shortened and a long service life is maintained.

NOTICE

Installing non-original parts will invalidate the guarantee.

❒ Only replace components or parts with original replacement parts

4.6 Disposal information

4.6.1 Disposal of the ash

❒ The ash should be disposed of in accordance with waste management regulations.

4.6.2 Disposal of system components

❒ Ensure that the system is disposed of in an environmentally friendly way in accordance with waste management regulations.

❒ You can separate and clean recyclable materials and send them to a recycling centre.

❒ The combustion chamber must be disposed of as builders' waste.

5 Troubleshooting

5.1 General fault with power supply

Error characteristics	Cause of error	Elimination of error
Nothing is shown on the display No power to the controller	General power failure Main switch is turned off FI circuit breaker or line protection is switched off Faulty fuse in the controller	 Turn on the main switch Switch on the FI circuit breaker or line protection Replace the fuse – note the amperage (10AT)

5.1.1 Behaviour of system after a power failure

When the power supply has been restored, the boiler returns to the previous mode and is controlled according to the specified program.

- ❒ **After a power failure, check whether the STL (high-limit thermostat) has tripped.**
- ❒ **Keep the doors of the boiler closed during and after the power failure, at least until the induced draught fan automatically starts up again.**

5.2 Excessive temperature

The high-limit thermostat (STL) shuts down the boiler when it reaches a temperature of max. 105°C. The pumps continue to run.

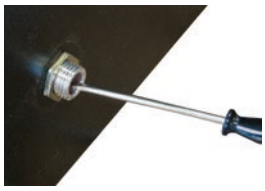

Once the temperature falls below approx. 75°C, the STL (high-limit thermostat) can be reset mechanically:

- ❒ Unscrew the cap on the STL (high-limit thermostat)
- ❒ Unlock the STL (high-limit thermostat) by pressing with a screwdriver

5.3 Faults with fault message

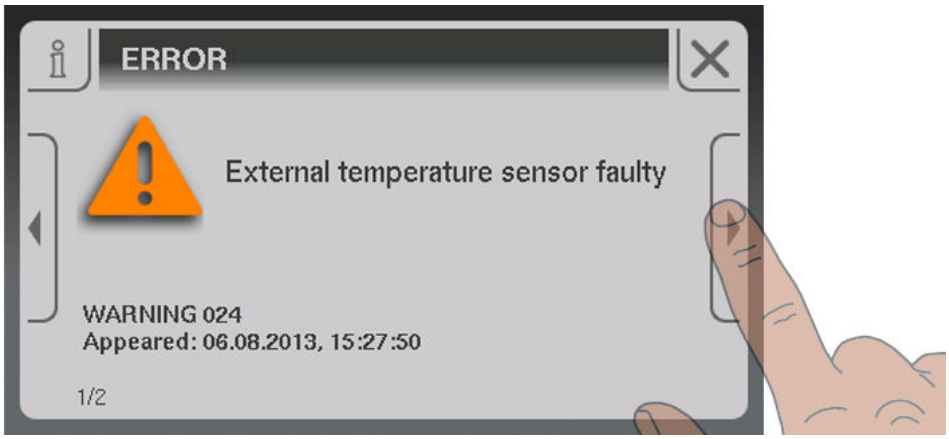

If a fault has occurred and has not yet been cleared:

❒ Status LED indicates the nature of the fault
- Orange flashing: Warning
- Red flashing: Error or alarm

❒ A fault message is shown on the display

The term "fault" is a collective term for warnings, errors and alarms. The boiler reacts differently to the three types of message:

WARNING	In case of warnings the boiler initially continues controlled operation, giving the option of resolving the error quickly to prevent a shutdown.
ERROR	The boiler follows the shutdown procedure and remains in "Boiler off" status until the problem is resolved.
ALARM	An alarm triggers a system emergency stop. The boiler shuts down immediately, the heating circuit controller and pumps remain active.

5.3.1 Procedure for fault messages

The procedure in the case of a fault message, the causes of faults and procedure for troubleshooting are described in the operating instructions for the boiler controller:

IMPORTANT! See operating instructions for the Lambdatronic H 3200 - T4

5.3.2 Acknowledging a fault message

Trace and remove the fault and then:

❒ Tap the “Cancel” symbol

➥ Status LED constant or flashing green light (depending on operating status)
- Green constant: Boiler switched on
- Green flashing: Boiler switched off

6 Appendix

6.1 Addresses

6.1.1 Address of manufacturer

FRÖLING
Heizkessel- und Behälterbau GesmbH

Industriestraße 12
A-4710 Grieskirchen
AUSTRIA

TEL 0043 (0)7248 606 0
FAX 0043 (0)7248 606 600
EMAIL info@froeling.com
INTERNET www.froeling.com

Customer service

Austria	0043 (0)7248 606 7000
Germany	0049 (0)89 927 926 400
Worldwide	0043 (0)7248 606 0

6.1.2 Address of the installer

Stamp